PART #: L1200

REVISIONS			
REV	DESCRIPTION	DATE	APPROVED

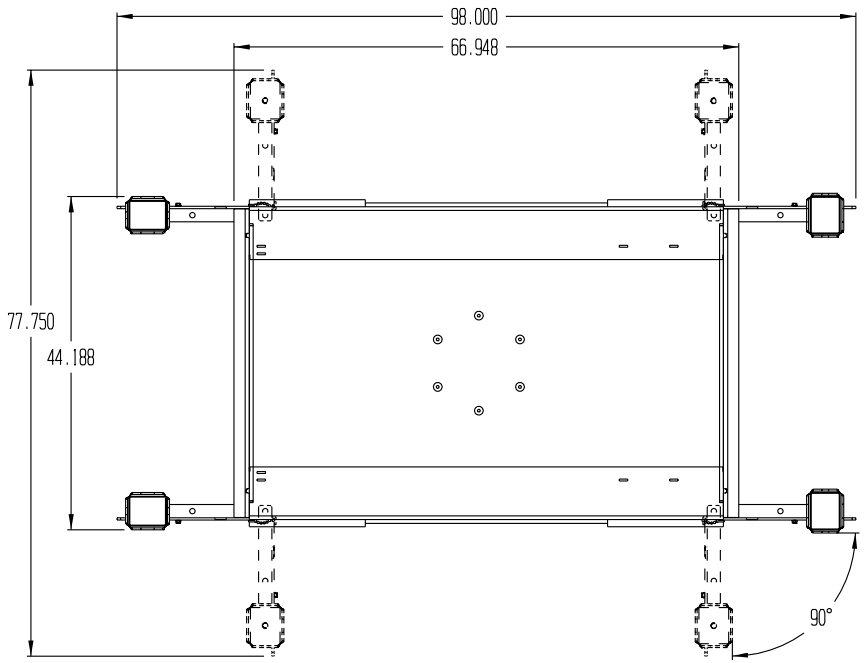

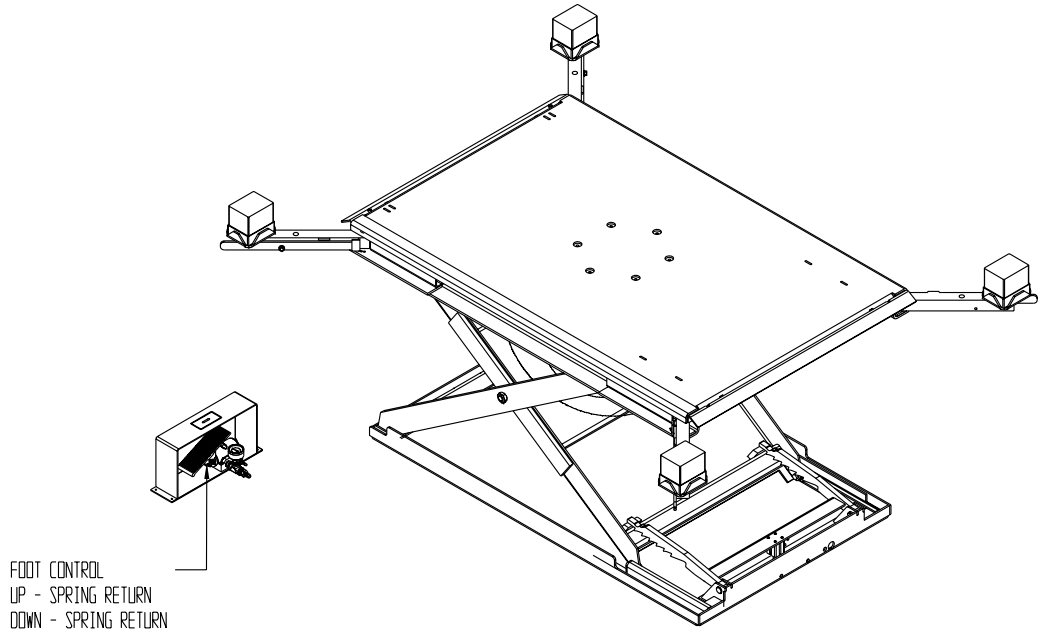

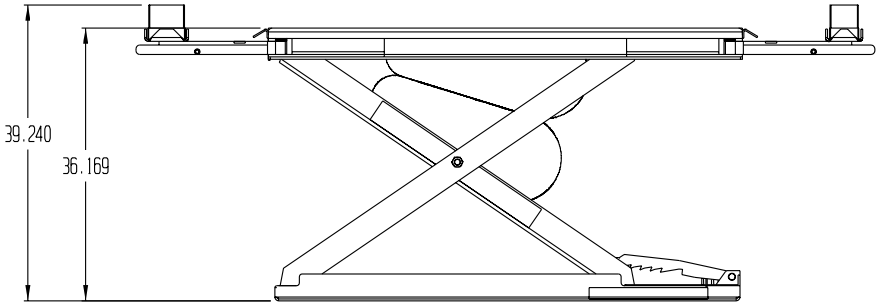

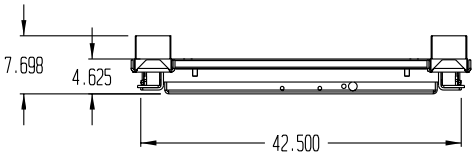

POS	PART#	MATERIAL#	DESCRIPTION	QTY	UNIT

TOLERANCES
UNLESS OTHERWISE NOTED
.X ± .250
.XX ± .125
.XXX ± 0.030
.XXXX ± 0.0050
ANGLE ± 1°

herkules™
2760 RIDGEWAY COURT ○ WALLED LAKE, MI. 48390-1662

TITLE: LIFT VEHICLE ADJ SWNG ARMS

DRN: JP 7-03-06	MATERIAL:				
PART #: L1200	CHKD. BY:	DWG NO.: 02063858	REV:	REF:	